

Cie Choari

Distro

Pauline Sonnic & Nolwenn Ferry

Teaser : https://www.youtube.com/watch?v=CtcRZqxmu0s

Full video : https://www.youtube.com/watch?v=YuSOSkSsesc

www.choari.com

Here, we drink time by the pint. We get drunk on good stories, and we come together for more than a drink. Here, we set emotions free. We dance again, we smile, we bare our teeth. We bump elbows, we undress each other with our eyes. We let go, we keep each other warm, we heal. Here, we weave the thread, build something out of nothing, create connection. We have a drink; we take a hit but always come back. We knock on wood, we hand out slaps, we raise our voice, we pound our fist. Then we forgive and shake hands.



The Company

Both with a background in contemporary dance and deep roots in Brittany, Pauline Sonnic and Nolwenn Ferry met while at the CNDC in Angers.

Amid the cultural diversity of their training, the two young dancers began questioning their own regional heritage. After two years of creation and exploration within the vernacular of contemporary dance, Pauline - a Breton through and through- and Nolwen- half Breton, half Lorraine- felt the need to turn back to the cultural and traditional heritage of their land. It allowed them to more broadly challenge the socio-cultural aspects at play, both past and present. Through movement, they delve into what brings people together, what sparks encounters, and what feeds a community.

Tsef Zon(e) (2019), their first piece, is an iodine-fueled energetic duo built around the Fest-Noz. It revisits the codes and values of those Breton festive gatherings. Their dance feeds on observations, encounters and experience. They have two distinct yet complementary personalities striving to share their work in a festive, accessible atmosphere.

Drawing on their backgrounds and practice, the two young dancers approach traditional forms from an outsider's perspective. Their work lies between anthropology and choreography, aiming to engage a broad audience through both their own knowledge and what they learn from encounters.

The company commits to an in-situ research approach, working alongside local specialists to make dance, in whatever form, relatable to new audiences with a strong desire for shared experience and mutual discovery.

They favour adaptable formats for both indoors and outdoors settings, where dancers and audience can communicate and interact through art.



Presentation

After the Fest-Noz of Tsef Zon(e), Pauline and Nolwenn went looking for another entity that brings a community to life; that makes people come together. For the company's second project, they turned to the local bar — and to the question of its social role.
A bar is a place for socialising and unwinding. People go there to gather more than to drink. If you walk in without a dry throat, it is because the thirst that pushes you through the door is one for connection. The bar and everything the word contains raises questions about how community, society and individual identity are formed.

Time : 40min + 15min (audience possibly invited to dance)

Barrez

In-situ piece for local bars
Barrez — Breton for "grumpy" (feminine word) — is a 30-minute choreographic piece conceived as an in-situ extension to Distro. Pauline and Nolwenn are joined by Alexandre Arthaud, and the trio performs directly inside bars or on terraces: the piece reads like snippets of bar-counter conversation.
Barrez can be performed once or twice daily, in one or several bars, always at aperitif time-midday and/or late afternoon.

This approach is designed to reach new audiences and foster connections between regulars and newcomers. Ideally it should function as a lead-up to Distro, with the company inviting bar regulars into the theatre —with a few complimentary tickets extended along the way. Through their energy and a choreographic language that blends physicality, rigour, and interaction with the audience, the company wants to give customers and bar patrons alike the urge to dance.



Technical specifications

Space : Fixed 10x10m: wood floor or swept concrete, must be a smooth hard surface on flat ground — no slopes, gravel, rammed earth, sand, grass. And for our bodies' sake please no holes nor manhole. *Feel free to send us photos in advance.*

Audience : Audience seated on bleachers, benches, carpet, or chairs arranged in a three-quarter circle around the stage, close to the performers.

Weather conditions : Dry weather (temperatures below 30°C) and wet weather provided the ground doesn't become slippery.

Sound requirements : 2 front speakers on stands, 2 subwoofers upstage, 1 mixing desk and 1 microphone. Soundtrack playback via computer and sound card with XLR output.

Specific needs : 4 pints of light beer, 1 parasol for the FOH/tech station plus 1 small table with 2 chairs, 1 broom.

Schedule : Company arrives 4 hours ahead of showtime — 2 hours for get-in, sound check and rehearsal / 1h warm-up/preparation backstage before the performance / 20 min for get-out.

Post-show suggestions : Audience possibly invited to dance traditional Breton dance and have a drink at the company bar. Merch available for sale.

Dressing room : please provide an iron and ironing board + 2 mirrors in the dressing room + a shower.

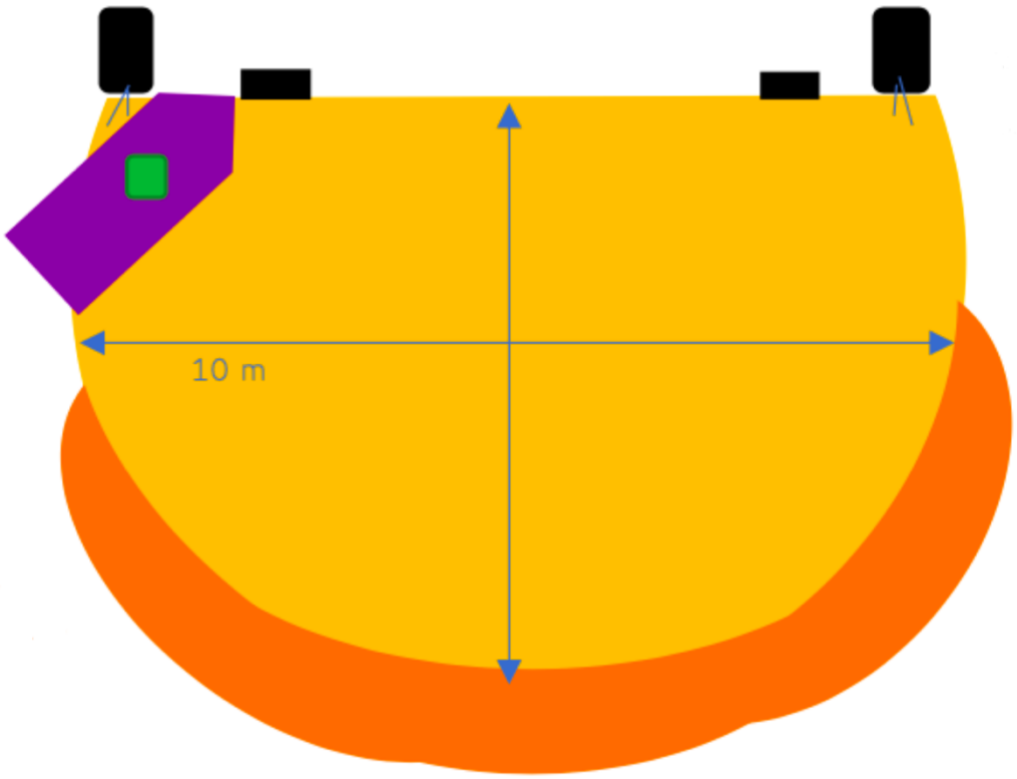

On Tour

Accommodation

Gîte, flat, single room per person (can also be hotel or host family). 1 dog with Pauline.

Transport

By train/boat + company van. Parking space near the venue.

Catering

Local, non-industrial, zero-waste, organic, vegetarian, artisan.

Touring team

2 dancers, 1 sound technician, 1 production manager, 1 dog (Fanfouet).

Conctacts

Artists : cie.choari@gmail.com
Diffusion : cie.choari.diff@gmail.com
Administration : cie.choari.admi@gmail.com
Technique : cie.choari.regie@proton.me

